연구용 원자로 기술 개발 및 수출 현황

2023. 5. 17., 제주국제컨벤션센터

한국원자력학회 원자로시스템기술연구부회

# 연구용 원자로 열수력 실험기술 개발

## Development of Thermal-Hydraulic Experiment Technology for Research Reactor

2023. 5. 17.


**박 종 학**

**한국원자력연구원**

# CONTENTS


- Introduction
- What is T-REX
- Rectangular channel experiment: vertical
- Rectangular channel experiment: horizontal
- Small vertical rod bundle
- Future plans

# Introduction

- Research reactor
  - Small core, low pressure, low temperature, immersed in pool
  - Various core design & configuration
  - Every single research reactor design is different

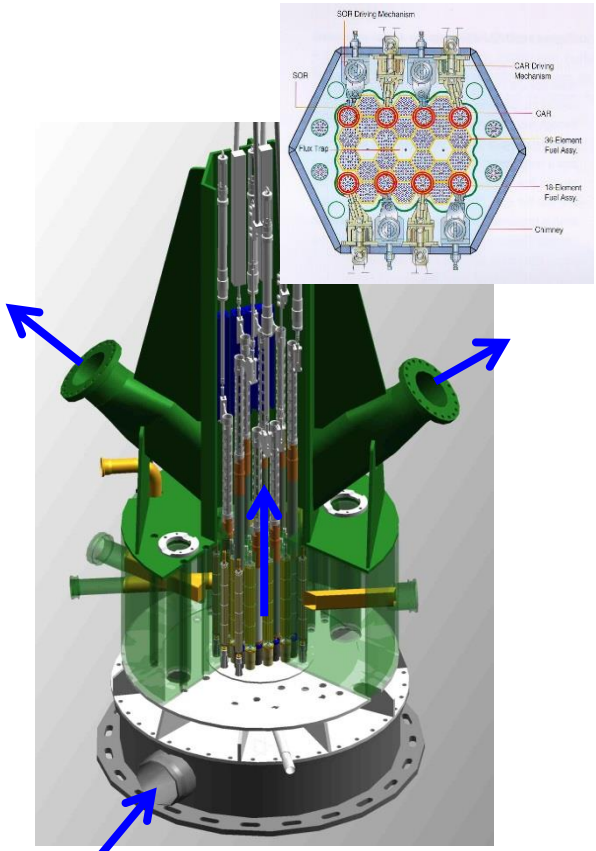


HANARO

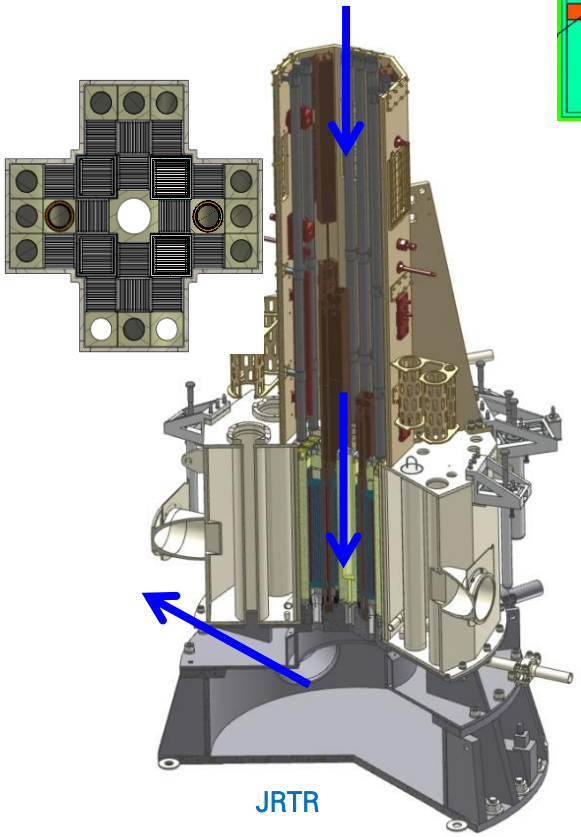

JRTR

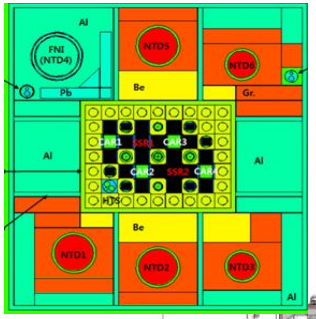


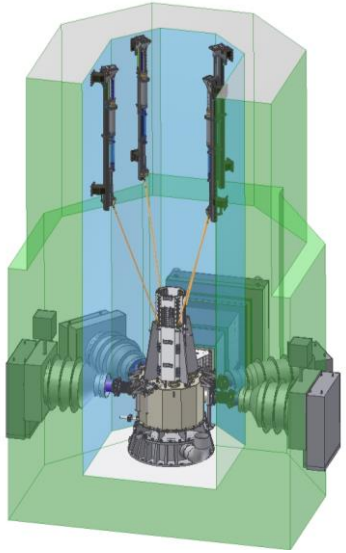

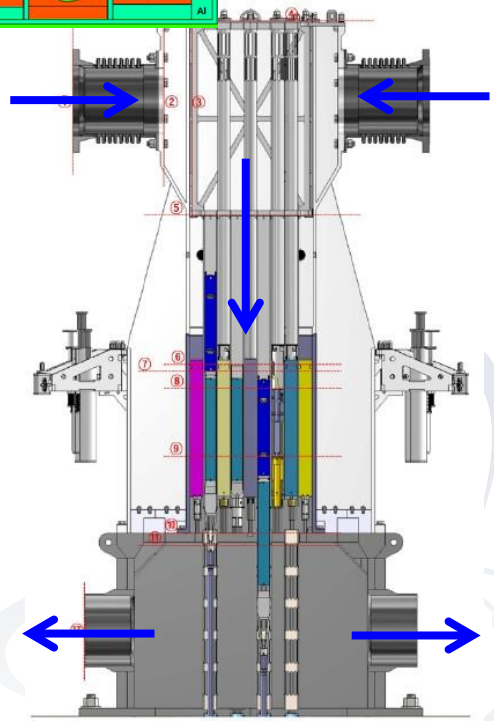

KJRR


3

# Introduction

❖ Research reactor

➢ Various types of fuel

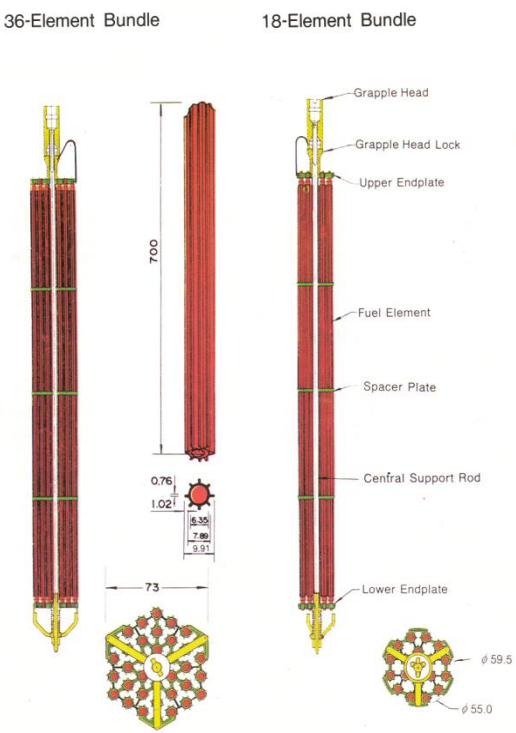


HANARO 36 rod & 18 rod assembly

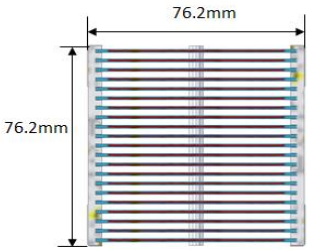


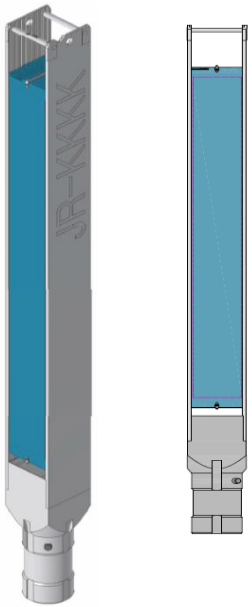

Plate fuel assembly

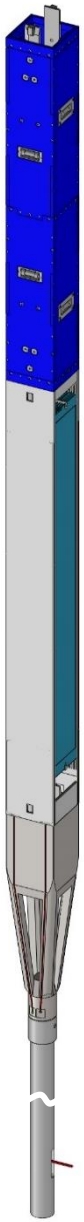

Follower fuel assembly

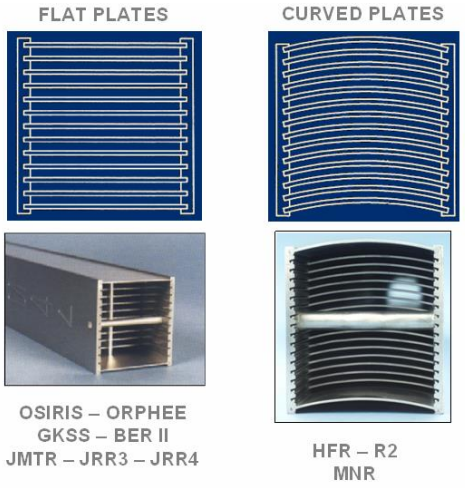


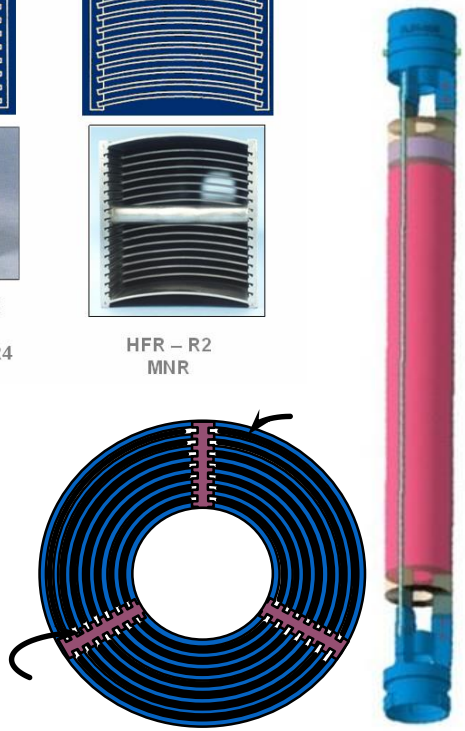

JHR fuel assembly

FRM-II fuel assembly

# Introduction

- Why we do this
  - Backgrounds
    - ✓ TH correlations based on old data
    - ✓ Regulatory body's requirement
    - ✓ Position in research reactor(RR) field
  - Our status & expectation
    - ✓ Become one of RR provider
    - ✓ Need to expand our knowledge bases on RR design
      - Acquire our own design data/knowledge
      - More accurate & reliable data to confirm our design safety margin
      - Expand our capability to design higher power RR
    - ✓ Build up & establish our knowledge & experience
    - ✓ Establish & enhance our position as a RR provider


5

# What is T-REX

- Test facility for Research reactor thermal-hydraulic EXperiment
  - Thermal hydraulic experiment/test facility for research reactor
  - Objective
    - ✓ Thermal-hydraulic experiment/test focusing on the specific research reactor conditions
    - ✓ Study on thermal-hydraulic phenomena such as ONB, OFI & CHF which are major parameters related to reactor design and safety
    - ✓ KAERI own experiment/test data to prove & improve the safety of research reactor
  - Current applications
    - ✓ A vertical narrow rectangular channel
      - Single-phase pressure drop
      - Single phase heat transfer
      - CHF & ONB test
    - ✓ Natural convection study
      - A horizontal narrow rectangular channel
      - A vertical small rod bundle

# What is T-REX : Facility specifications

| Parameters | Single Channel test | Fuel Assembly test |
|---|---|---|
| Mass flow rate | Max. ~2 kg/s | Max. ~30 kg/s |
| Channel velocity | Max. 15* m/s (single-phase flow) | ~ 8.5** m/s |
| Flow direction | Up / Down | |
| Pressure | Max. 10 bar | |
| Electric Power | 1.5 MW | |
| DC rectifier | Max. 45V, 18,000A | |
| Heat flux* | Max. 7.0 $MW/m^2$ (uniform) | |
| Purpose | High flux CHF test for various type channel<br>- a rectangular channel<br>- a circular tube & non-circular tube<br>- an annular tube | Hydraulic test for a fuel assembly<br>- a plate type fuel assembly<br>- a rod type(ex HANARO fuel)<br>- various types of fuel assembly |

* Assuming test-section geometry : $W_h$=62 mm, S=2.35 mm, L=600 mm
** JRTR/KJRR fuel assembly

| Parameter | Measurement device | Measurement error |
|---|---|---|
| Mass flow rate | Micromotion CMF100 | 0.05%~0.25% of Reading |
| Fluid temperature | T/C | 1.1K (T/C) |
| Wall temperature | T/C, Pyrometer | 1% of reading (Pyrometer) |
| Pressure | Rosemount 3051S | 0.11% of FS |
| Voltage | DAQ device | 0.07% of reading + 0.005% of range |
| Current | Shunt & DAQ device | 1% of FS |

# What is T-REX : Major components

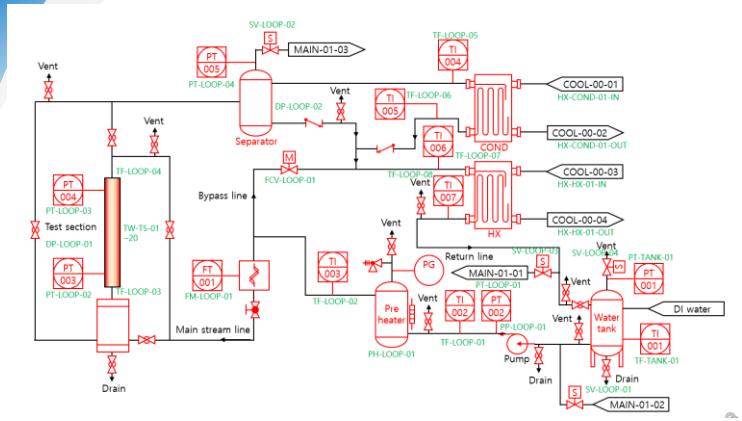


P&ID of single channel test loop

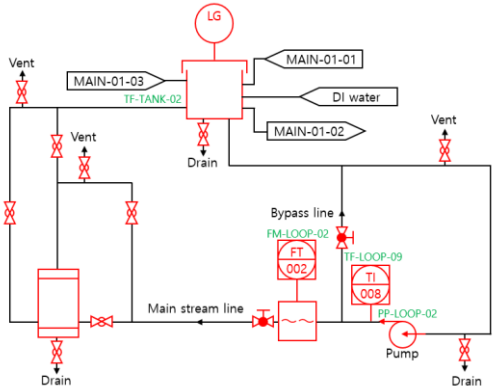


P&ID of fuel assembly test loop

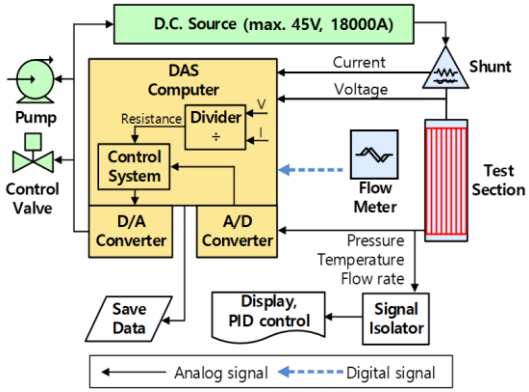


DAQ system

Single channel test loop

Fuel assembly test loop

Cooling tower

Monitoring & control display

Electric power supply system

DC rectifier

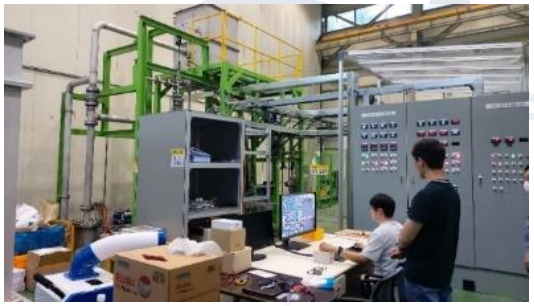

Test loop control panel

# T-REX : Performance

❖ Comparison to other facility

| Parameter | PNU | SULTAN-JHR | T-REX |
|---|---|---|---|
| Flow velocity | 10 m/s<br>(W=66.6 mm, S=2.35 mm) | 18 m/s<br>(W=53.5 mm, S=1.5 mm) | 15 m/s (21 m/s*)<br>(W=66.6 mm, S=2.35 mm) |
| Flow rate<br>(Single-phase water) | ~ 1.5 kg/s | ~ 2.0 kg/s | ~ 2.4 kg/s |
| Heat flux | 5.3 $MW/m^2$<br>($W_h$=62 mm, L=600 mm) | 7.5 $MW/m^2$<br>($W_h$=47.2 mm, L=600 mm) | 7.0 $MW/m^2$<br>(~ 9.0 $MW/m^2$*)<br>($W_h$=62 mm, L=600 mm) |
| Total power | 640 kW | 600 kW | 810 kW |
| Pressure | 0.15 ~ 1 MPa | 0.2 ~ 0.9 MPa | 0.15 ~ 1 MPa |

* Assuming SULTAN-JHR condition

# Rectangular channel experiment

## ❖ Test-section design

Heaters

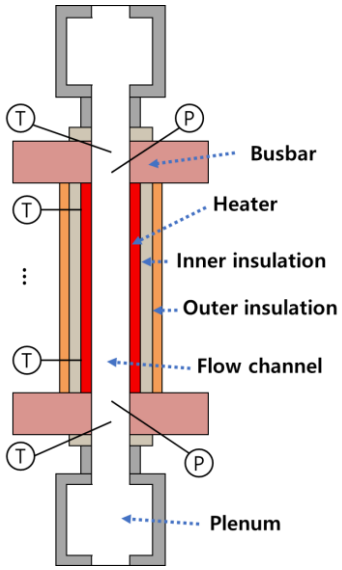


Side view

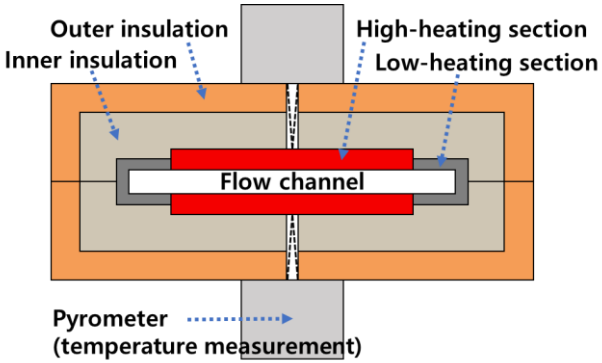


Cross-section view test section

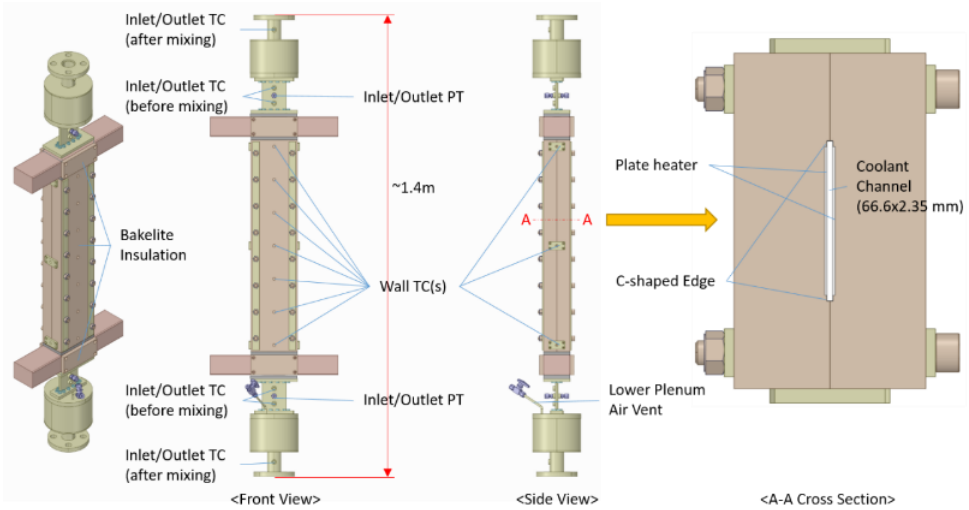


Details of narrow rectangular test section

| Parameter | Value |
|---|---|
| Channel width (mm) | 24.6 ~ 66.6 |
| Heated width (mm) | 20 ~ 62 |
| Gap (mm) | 2.35 |
| Length (mm) | 600 |
| Heating material | STS430 (high)<br>STS410 (high)<br>STS304 (low) |

# Rectangular channel experiment

## ❖ Measurement method

- ➢ Optical sensor : wall temperature measurement
  - ✓ Troubles of T/C measurement
    - ▪ Dependency on installation skill
    - ▪ Measurement error by Joule heating
    - ▪ Low response speed
  - ✓ Pyrometer
    - ▪ No dependency on installation skill
    - ▪ High response speed
- ➢ Power increase method
  - ✓ Continuous increase
    - ▪ Single-phase pressure drop

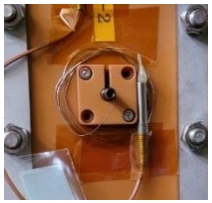

T/C

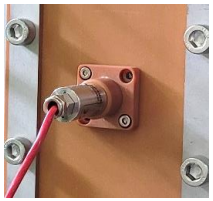

Pyrometer

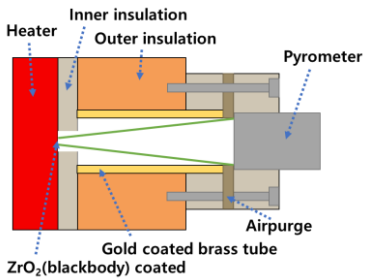


Wall temperature measurement

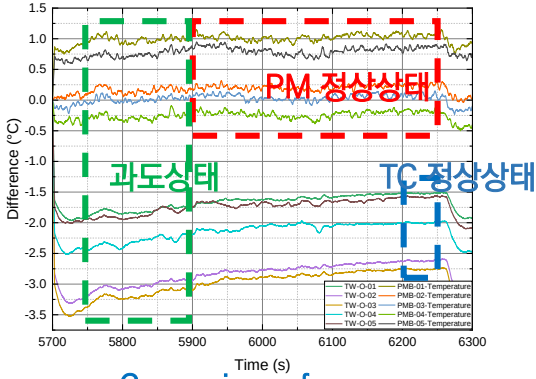


Comparison of response pyrometer vs T/C

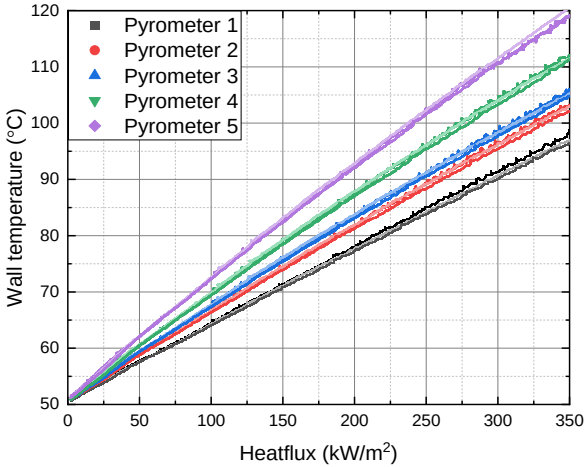


Effect of power increase method

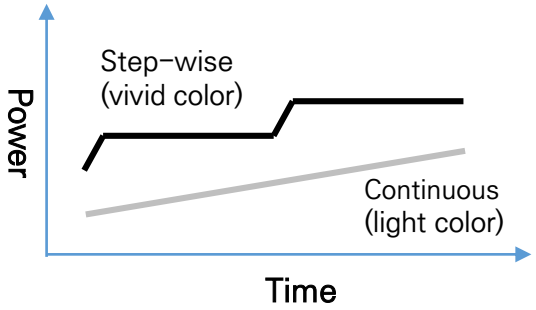


Power increase method

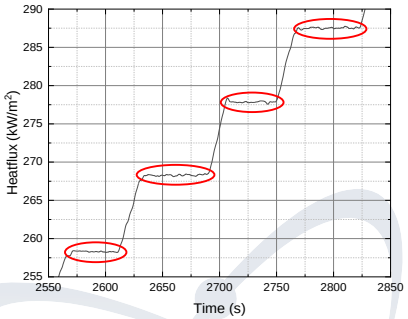


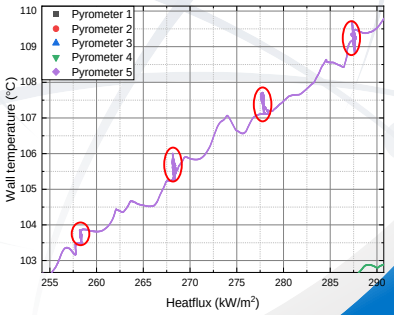

# Rectangular channel experiment : horizontal

❖ A horizontal narrow rectangular channel

- ➢ Considering a virtual condition
  - ✓ Simulate a fuel assembly lying on the bottom of pool
  - ✓ Decay heat of fuel plate is removed by natural convection
  - ✓ Restrictive cooling condition
- ➢ Studying heat transfer characteristics
  - ✓ Cooling limits without CHF
  - ✓ Occurrence of CHF

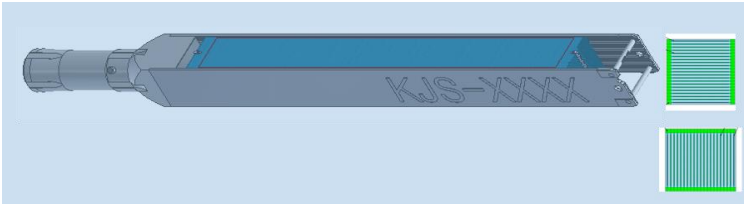


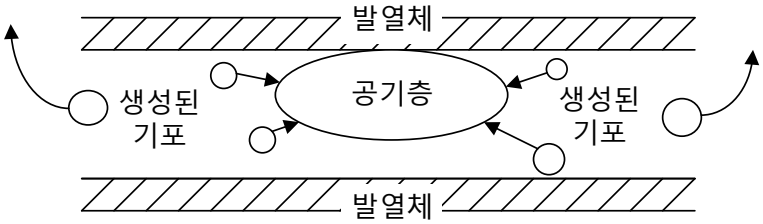


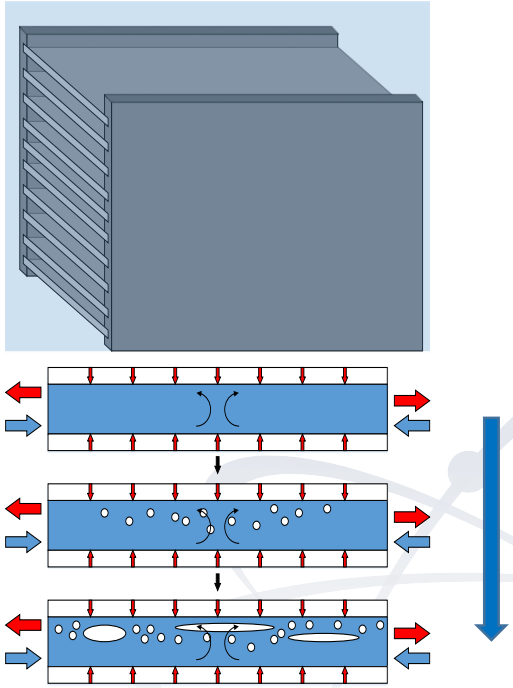

# Rectangular channel experiment : horizontal

## ❖ Experimental apparatus

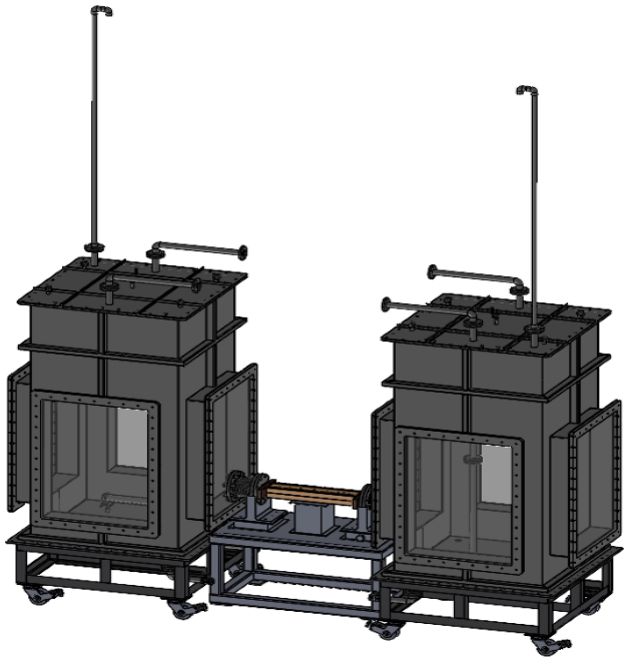

Design of experimental apparatus

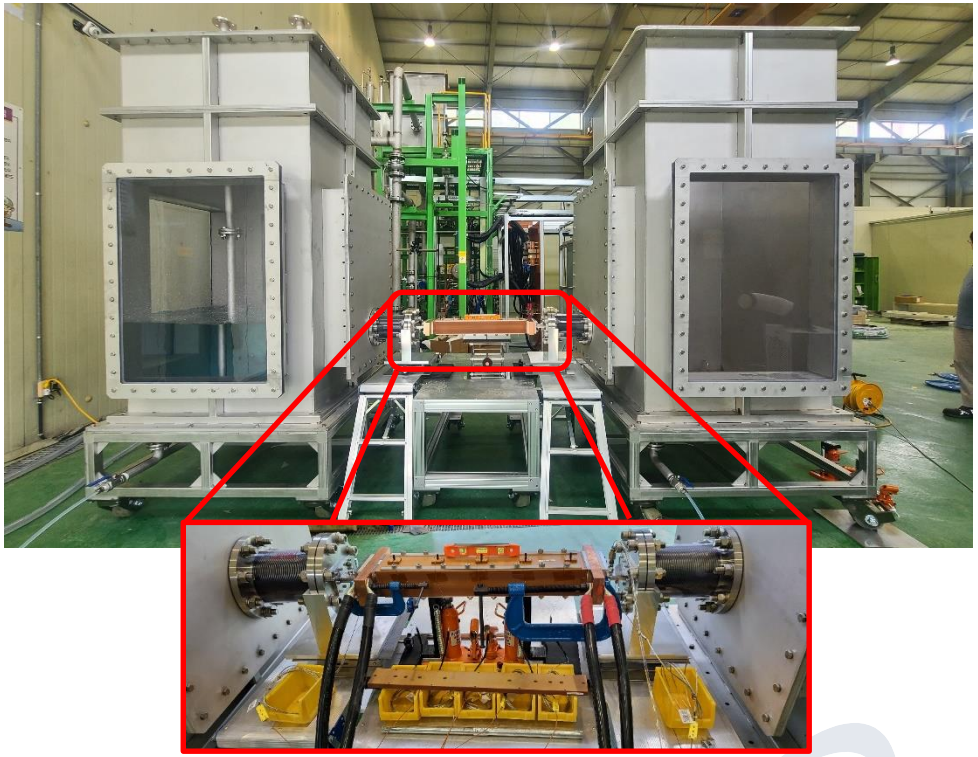

Test section

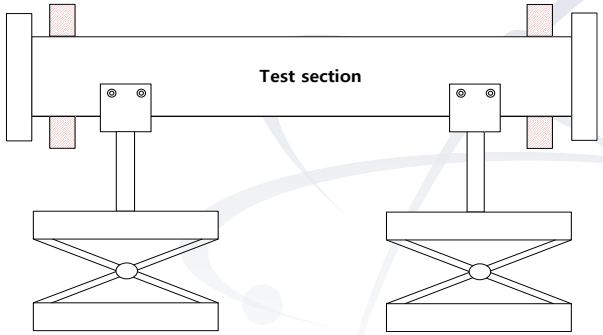

# Small vertical rod bundle

❖ Low power reactor for education & basic research

- ~ 50 kW cooled by natural circulation of pool water
- For education & basic research of developing country that want to get nuclear technology
- Small core using vertical rod fuel
- Need to thermal-hydraulic experiment
  - ✓ Finding the cooling capacity by natural convection -> design data
  - ✓ Checking coolability of the conceptual design
  - ✓ Finding design improve for thermal margin
- Design experiment apparatus
  - ✓ Real scale and real geometry
  - ✓ Simulating real condition

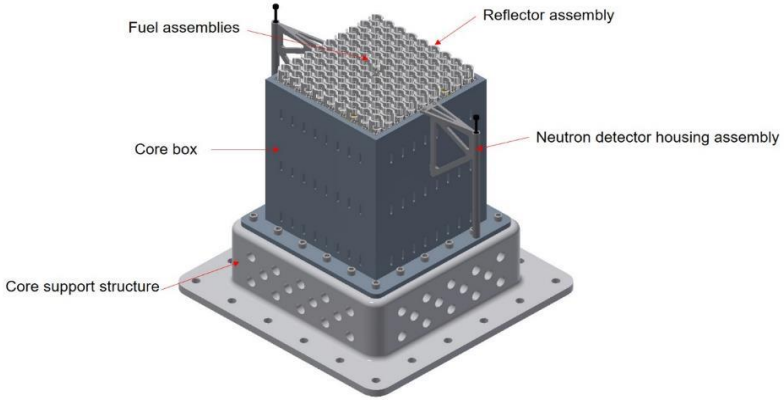


Conceptual design

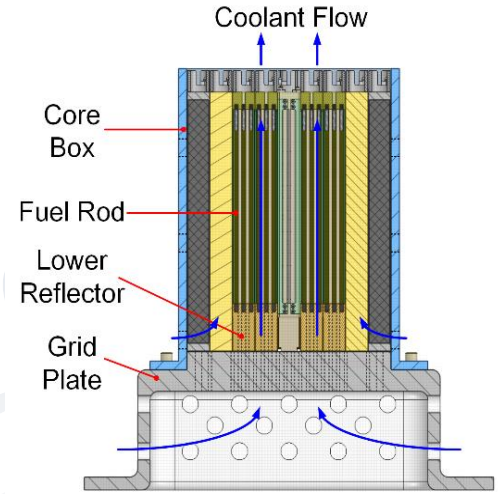


Coolant path by natural convection

# Small vertical rod bundle

❖ Design of experimental apparatus

➢ Effect of geometry

✓ Flow path resistance of support structure

✓ Design check by CFD analysis

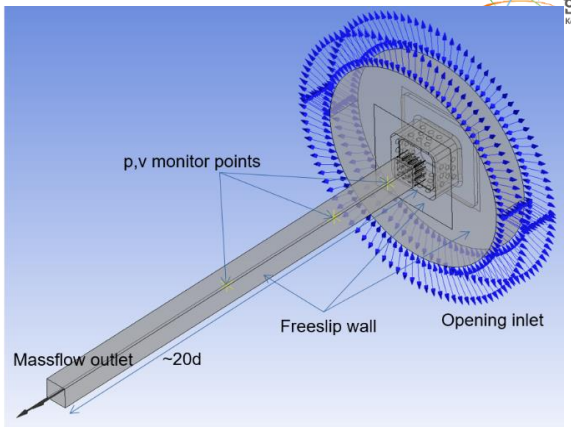


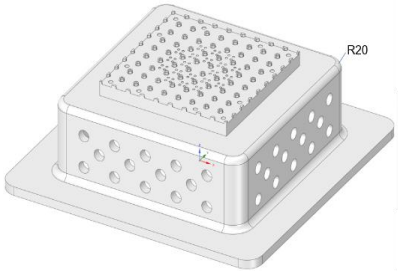


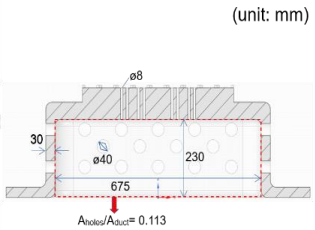


<Cross-section view>

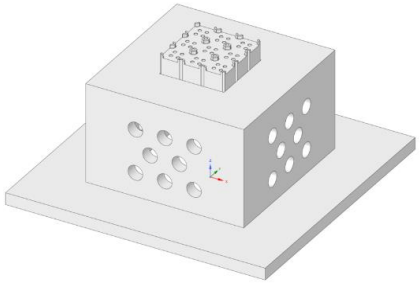

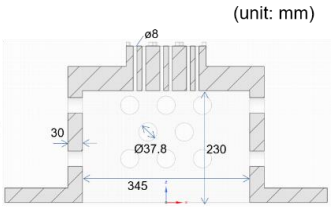


<Cross-section view>

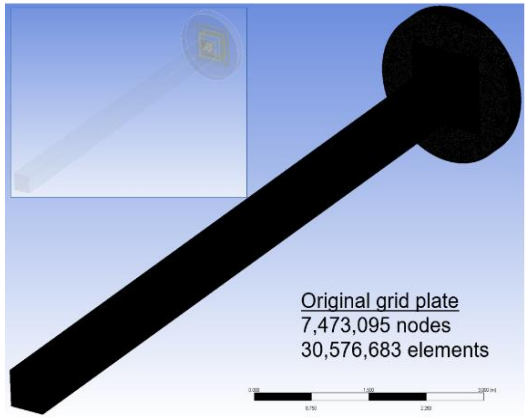


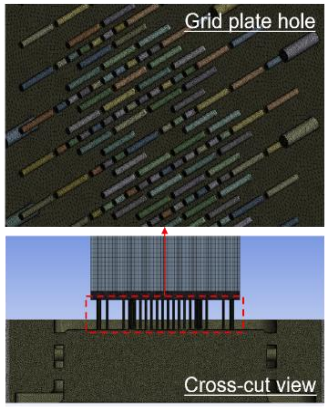


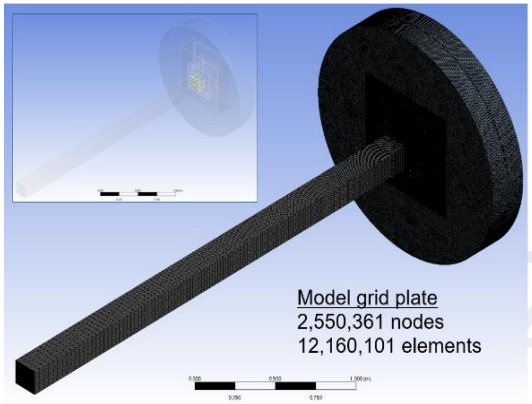


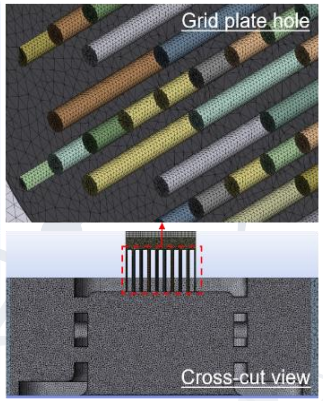

# Small vertical rod bundle

## ❖ Design of experimental apparatus

### ➢ Water pool & cooling system

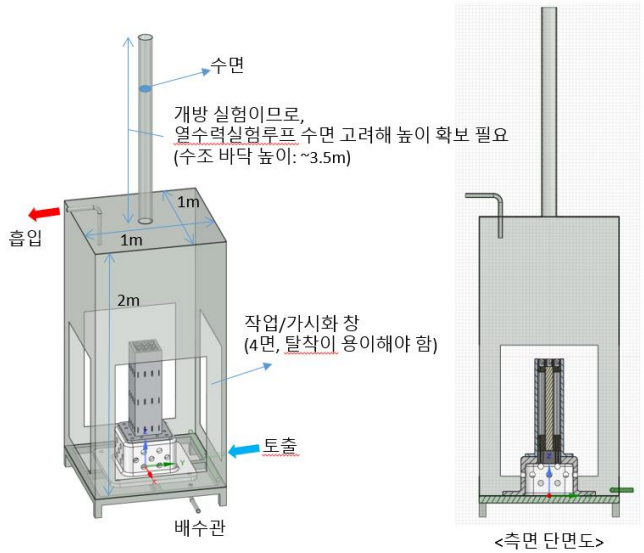


Conceptual design of experimental apparatus

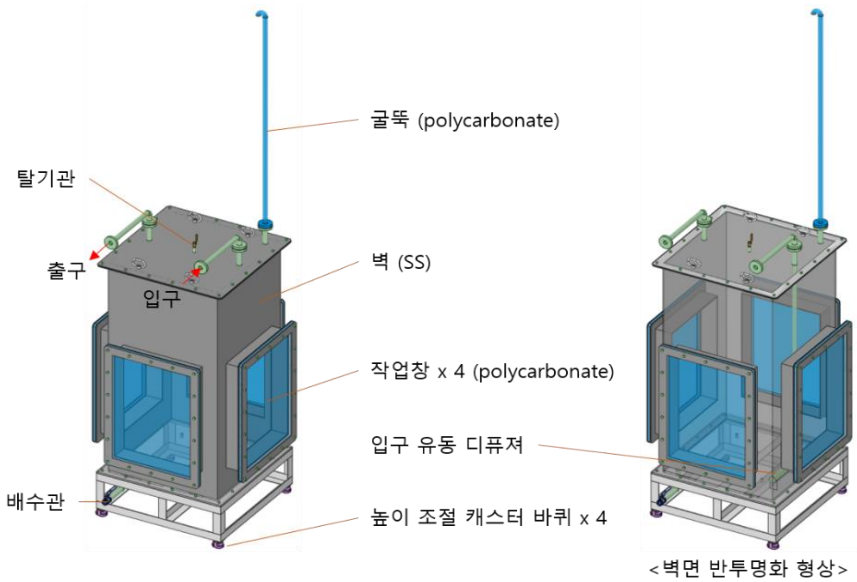


Detail design of water pool

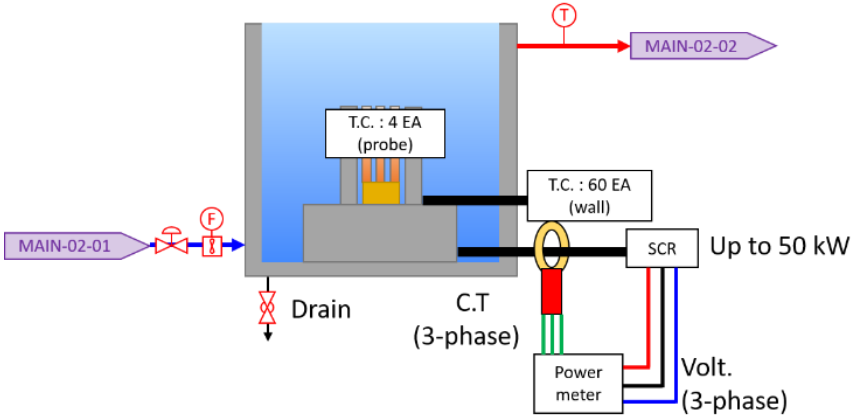


Design of cooling line

# Small vertical rod bundle

## ❖ State of progress

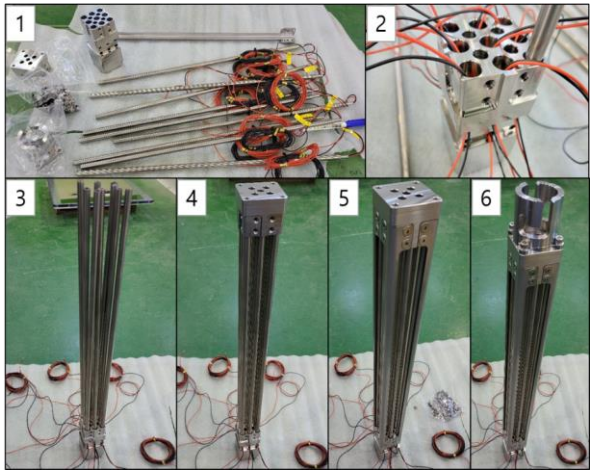


Rod bundle assembly

Water pool

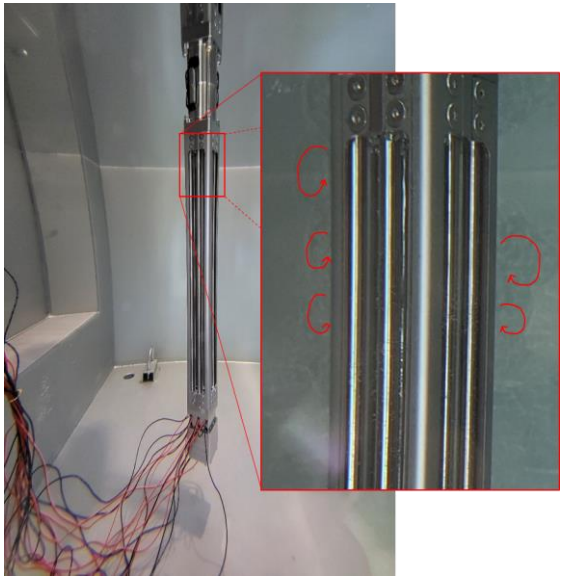

Pre-test : exciting power

Cooling system

Movie

# Future Plans

- Vertical rectangular channel
  - CHF
    - ✓ Carry out experiment at up-flow & higher velocity
      - Acquiring & build-up experiment data
      - Comparing to existing correlations -> improving them -> new correlation
    - ✓ Enhance T-REX performance & capacity
    - ✓ Develop & improve the experiment/test technology
  - Single / two-phase pressure drop & heat transfer
    - ✓ Carry out experiment
      - Acquiring & build-up experiment data
      - Comparing to existing correlations -> improving them -> new correlation
- Natural convection experiment
  - Horizontal rectangular channel
    - ✓ Experiment
      - Effect of inclined channel
      - Occurrence of CHF
  - Small vertical rod bundle
    - ✓ Experiment
      - Natural convection cooling capacity by power
      - Effect of local rod boundary condition
      - Full core condition

한국원자력연구원
KAERI Korea Atomic Energy Research Institute

# Thank you~ (^_^)